□ –LAYOUT NUMBER
○ –CRITICAL CHARACTERISTIC
◎ –KEY CRITICAL CHARACTERISTIC

FOR REFERENCE ONLY UNLESS STAMPED OTHERWISE

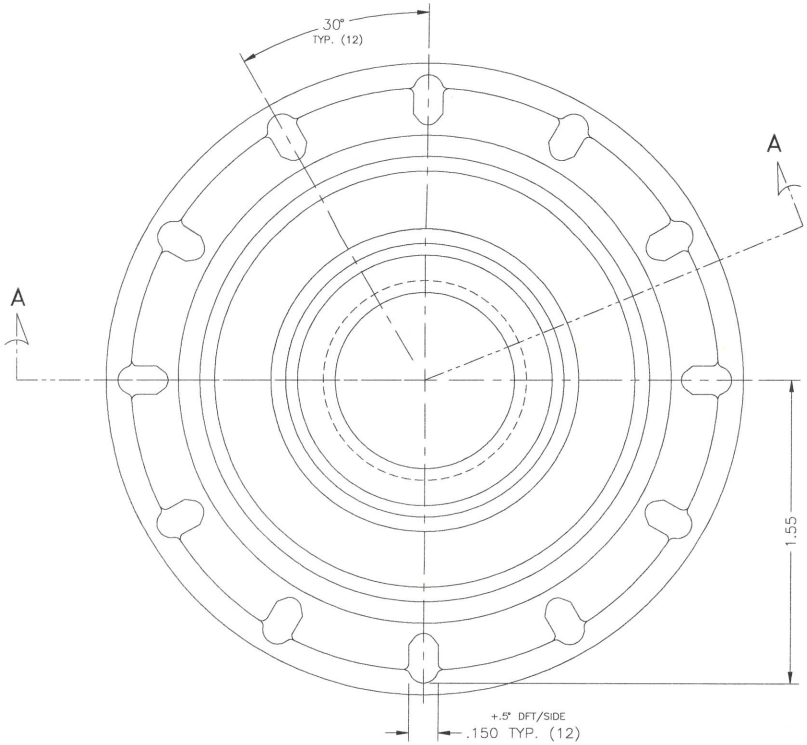

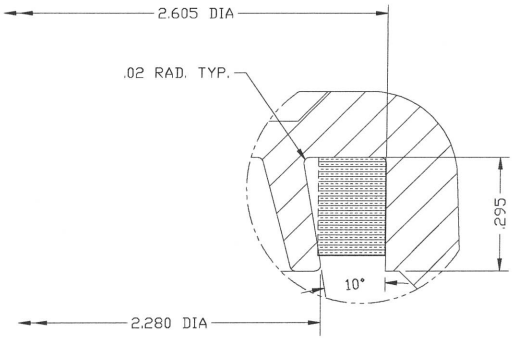

VIEW "B"
SHOWN 4X SIZE

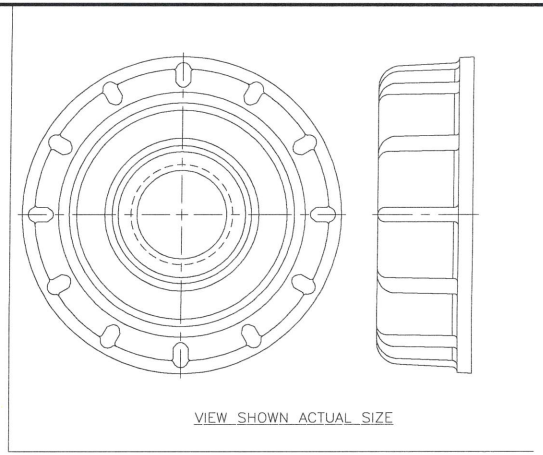

VIEW SHOWN ACTUAL SIZE

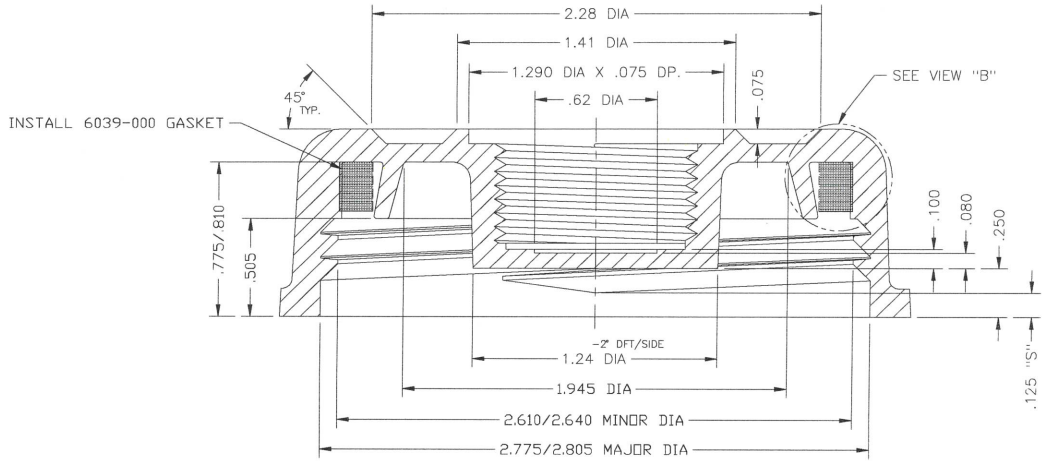

SECTION A–A

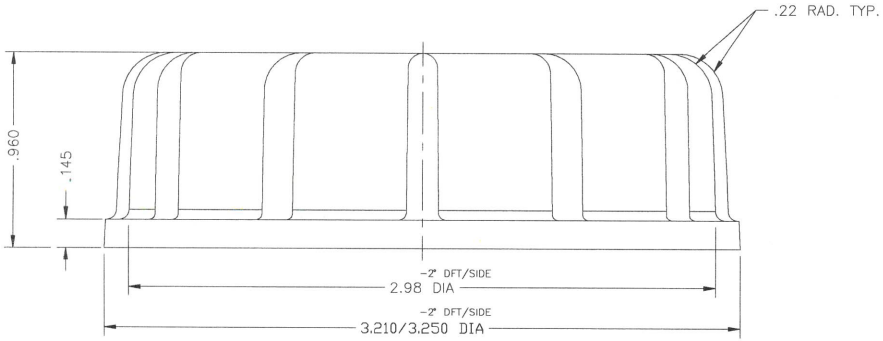

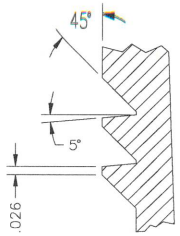

THREAD DETAIL
SHOWN 4X SIZE

NOTES:

1. CENTER THREADS ARE 3/4–14 NPT TAPERED WITH 2° DRAFT/SIDE X .50 DEEP.
2. ALL THREADS WHEN ENDED SHOULD BE WORKED TO A SMOOTH RADIUS.
3. 70MM SPECIAL NECK CLOSURE SPECS:
   –8 THREADS PER INCH
   –.125 PITCH
4. U.V.I. ADDED TO CAP MATERIAL

RECEIVED
MAY 07 2020
Part # 254054
cg 5/07/2020

DRAWN BY: KMW	DATE: 1/23/07	REVISED: –	Priority Plastics INC. 500 Industrial Park Road PORTLAND, INDIANA 47371 260-726-7000
CHECKED BY: –	DATE: –	SCALE FACTOR: 2:1	
TOLERANCES UNLESS OTHERWISE SPECIFIED	MATERIAL: POLYPROPYLENE Primary Material: Himont Profax 8523	DRAWING DESCRIPTION: 70MM CAP–POLYPROPYLENE–W/ 3/4 NPT & SQUARE GASKET 6039–000 GASKET	
DO NOT SCALE PRINT	ITEM NUMBER: 8229–202–060	SHEET 1 OF 1	DRAWING NUMBER: 8229–202–060

ECN.	DATE	LET.	CHANGE	BY